Model EL62AM

Extruded Aluminum Louver • 6” Deep • Baffle Blades • Non-Drainable • Adjustable • Concealed Actuator

STANDARD CONSTRUCTION

FRAME: .081” thk. (nominal) extruded aluminum, 6063-T52/T6 alloy. Channel type.

BLADE: .081” thk. (nominal) extruded aluminum 6063-T52/T6 alloy. Blades are approximately 4½” on centers.

LOUVER FACE: Full width sill with drain head and non-drain blades contained within drain jambs.

SHAFT: .50” dia aluminum “Pin-Lock” rod.

BEARINGS: Celcon bearing material so that there will be nometal to metal friction.

LINKAGE: Extruded aluminum, concealed in the channel out of the airstream. The pivots, which rotate in Celcon bearings, are .50” dia. plated and machined steel. The pivot is locked to the 5⁄16” dia. aluminum linkage rod by a ¼ - 20 set screw with epoxy locking patch.

SEALS: Extruded silicone rubber seals at blade edge. Polyurethane at jambs.

SCREEN: (When indicated, in a removable frame) ½” flattened aluminum, .051” thk.,

-or- ½” sq. mesh intermediate double crimped aluminum wire, .063” dia.,

-or- 18⁄16 aluminum mesh insect screen, .011” dia.

ACTUATOR: 120 VAC, spring return normally closed. 133 in-lbs. torque.

FINISH: Mill.

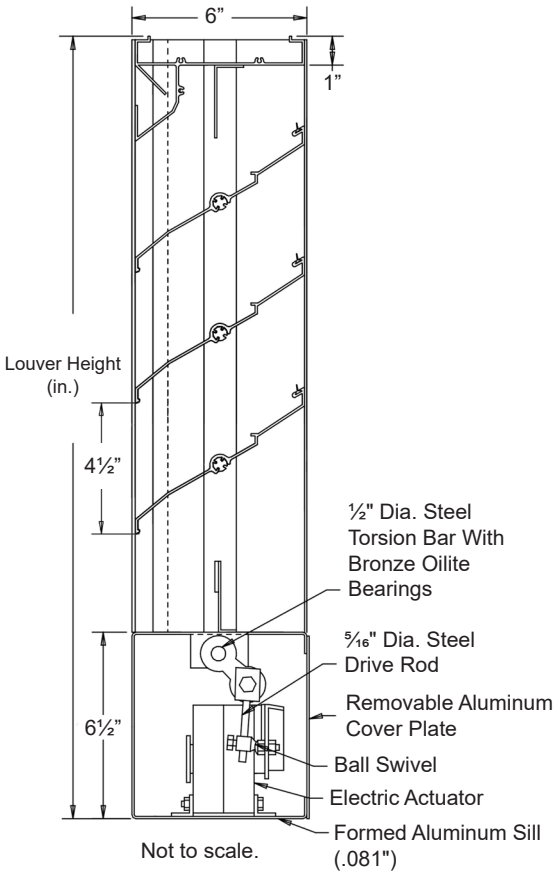

OPTIONS

Finishes - Enamels, Epoxies, etc.
Other screens also available.

NOTES

1. ½” nominal deduction will be made to the opening size given.
2. Approximate shipping weight is 5.5 lbs./sq.ft.

LOUVER SIZES

Min Panel	Max Single Panel
12”W x 12”H	48”W x 96”H

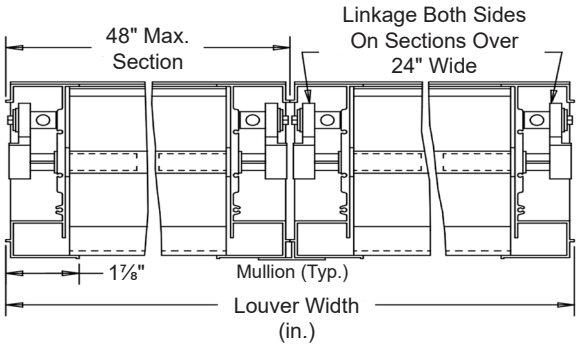

Item #	**Qty**	Width	Height	Width	Height	**Mullion**	Type	Location		
		Opening Size		**Louver Size**			**Screens**			**Union Made**
Arch. / Eng. :						**EDR:**		**ECN:**		**Job:**
Contractor:										
Project:						**Date:**		**DWN:**		**DWG:**

In the interest of product development, Louvers & Dampers reserves the right to make changes without notice.

Louvers & Dampers
A Mestek Company

www.louvers-dampers.com

450 Riverside Drive • Wyalusing PA, 18853 • Phone 570-746-1888 • Fax 570-746-9286